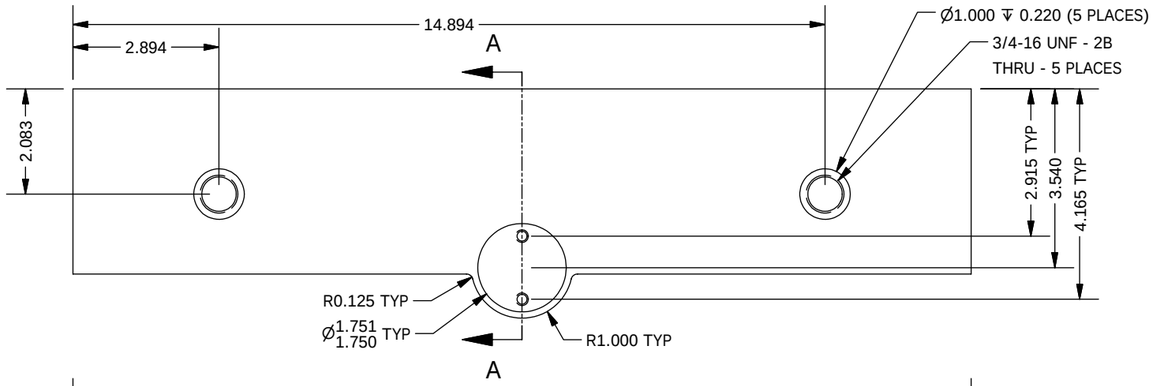

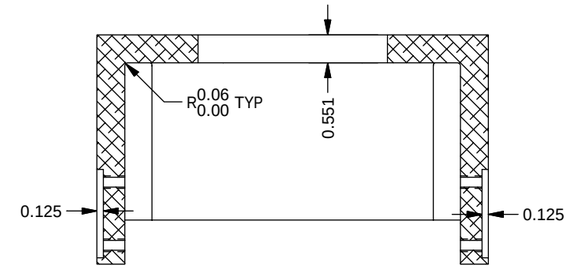

SECTION A-A
SCALE 1 / 3

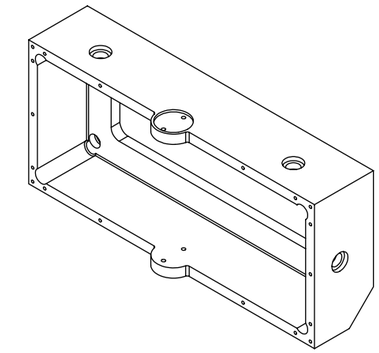

SCALE 0.15 : 1

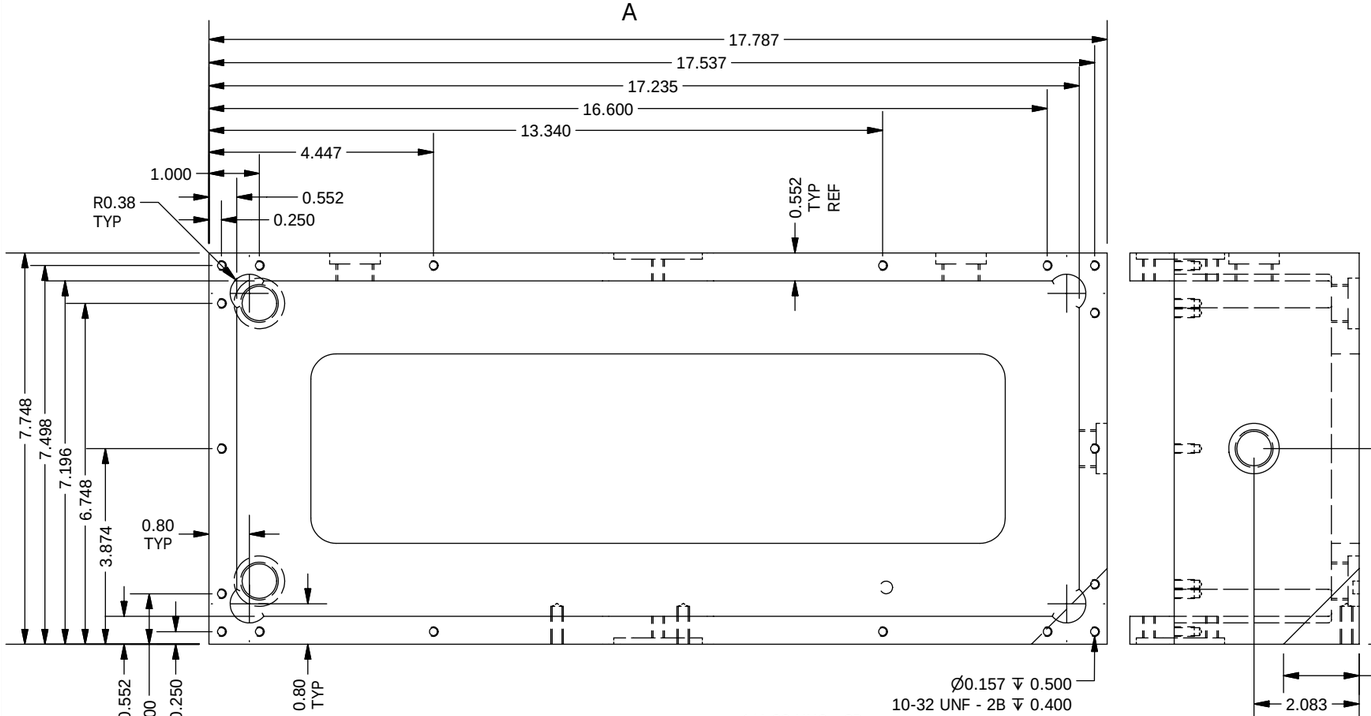

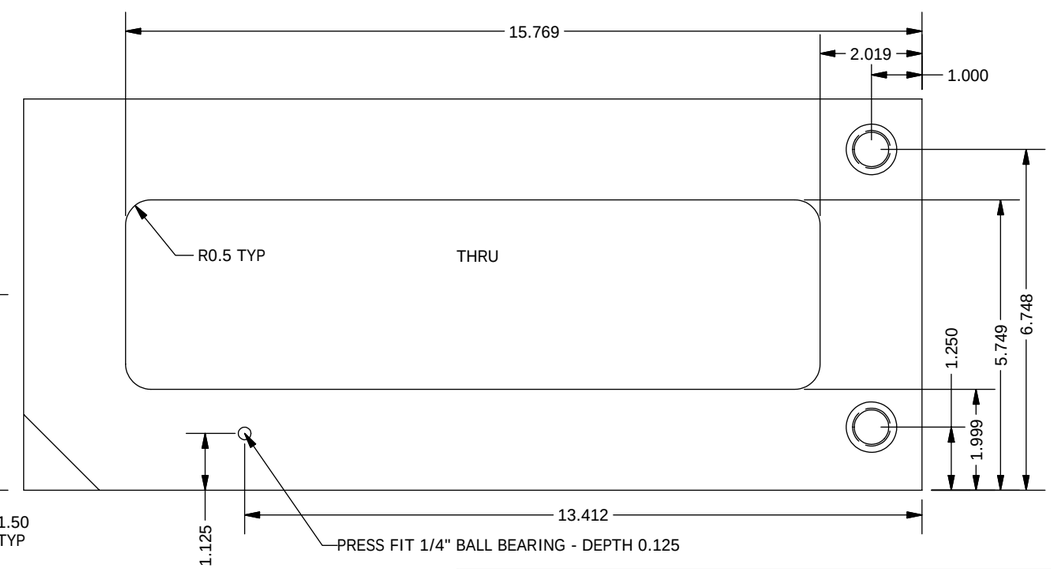

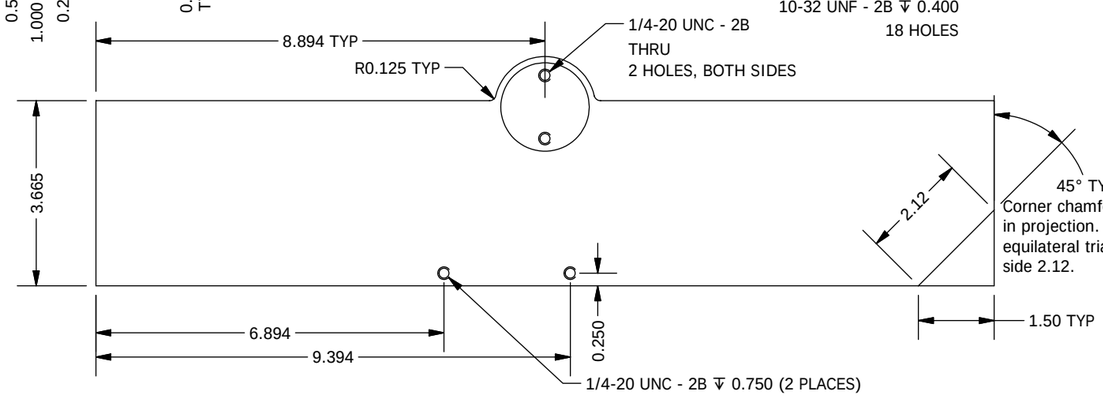

NOTES

1. Anodize black

ITEM	QTY	DESCRIPTION
1	1	PFS11023

Bill of Material

THE OBSERVATORIES
OF THE CARNEGIE INSTITUTION OF WASHINGTON
813 Santa Barbara Street
Pasadena, CA 91101

MATERIAL: Aluminum-6061

EST WEIGHT: 12.6 lb

SCALE: 1:3

	BY	DATE
DWN	CRANE	4/15/2008
APVD		

UNLESS OTHERWISE SPECIFIED
FRACTIONAL +/- 1/32 DECIMAL .XX +/- 0.01 ANGULAR +/- 0.1 DEG
.XXX +/- 0.002 GOAL
.XXX +/- 0.005 REQD
BREAK SHARP EDGES MACHINED SURFACES 125
ALL DIMENSIONS IN INCHES

P lanet
F inder
S pectrograph

Grating Cell

SHEET B | DRAWING NUMBER PFS11023 | SHT 1 OF 1 | REV 3