NOTES

1. Begin by creating a full lens blank with center thickness 0.199, curvature radius 8.295, and semi-diameter greater than or equal to 1.673.

2. Remaining features may be produced by milling the lens blank.

3. Anodize black.

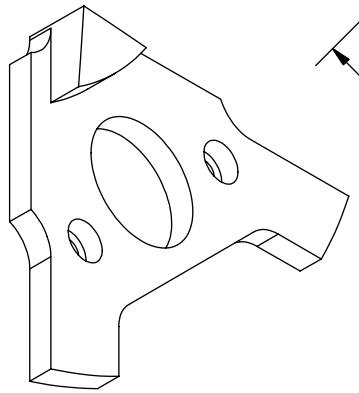

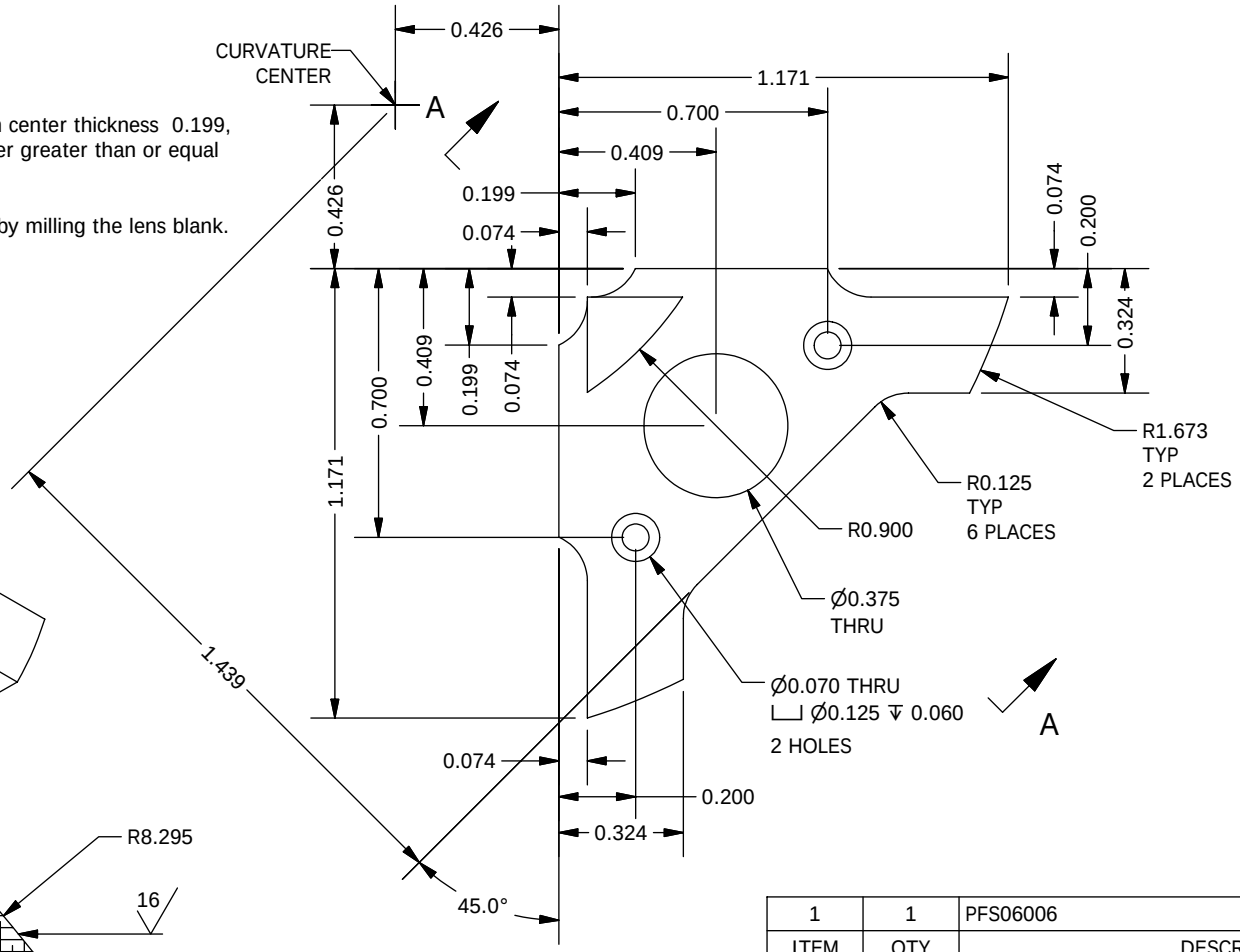

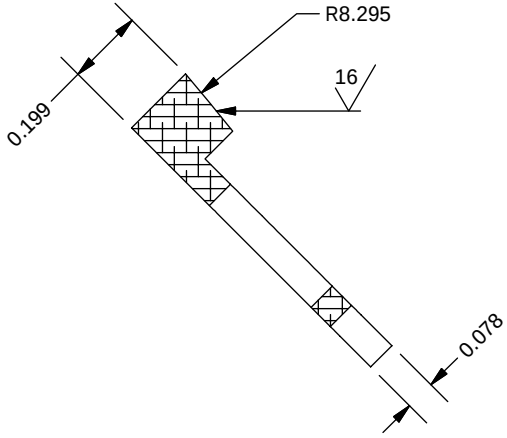

SECTION A-A

1	1	PFS06006
ITEM	QTY	DESCRIPTION

Bill of Material

THE OBSERVATORIES
OF THE CARNEGIE INSTITUTION OF WASHINGTON
813 Santa Barbara Street
Pasadena, CA 91101

MATERIAL: Aluminum-6061

EST WEIGHT: 0.08 oz

UNLESS OTHERWISE SPECIFIED
FRACTIONAL +/- 1/32 | DECIMAL .XX +/- 0.01 | ANGULAR +/- 0.1 DEG
.XXX +/- 0.002 GOAL
.XXX +/- 0.005 REQD
BREAK SHARP EDGES | MACHINED SURFACES 125
ALL DIMENSIONS IN INCHES

SCALE: 2:1

P lanet
F inder
S pectrograph

PFS6A Lens Axial Support

DWN	CRANE	2/27/2007
APVD		
	BY	DATE

SHEET: A | DRAWING NUMBER: PFS06006 | SHT 1 OF 1 | REV